# 200 KORPUS

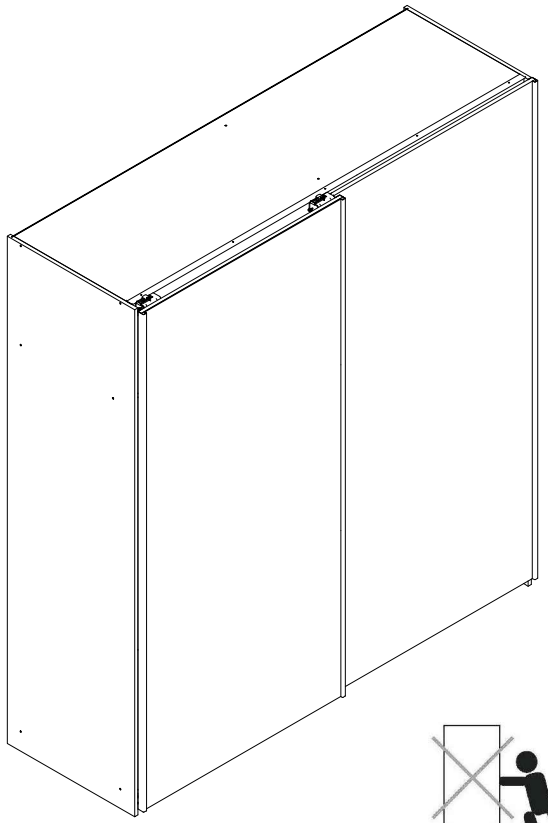

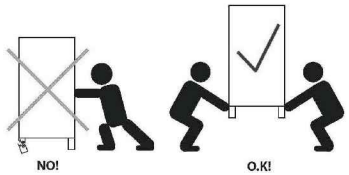


(D) Montageanleitung
(FR) Notice de montage
(NL) Handleiding voor de montage
(CZ) Montážní návod
(HU) Szerelési útmutató
(TR) Montaj talimati
(GB) Assembly Instructions
(IT) Istruzioni di montaggio
(PL) Instrukcja montażu
(SK) Návod na montáž
(RO) Instructiuni de montaj
(RU) Инструкции по монтажу

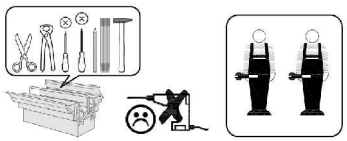



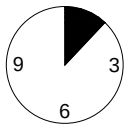


2-2,5



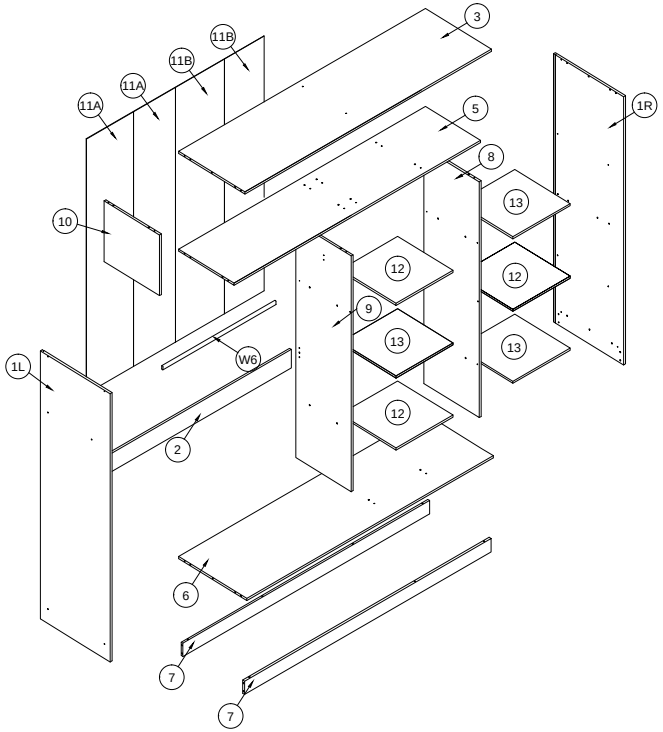


| | | | | | | | |
|---|---|---|---|---|---|---|---|
| YD 7x50 x38 | | | | | | | |
| WB x1 | SD x1 | KL x4 | SG x1 | ZB x12 | T x2 | ND 3,5x16 x70 | ZG x38 |
| S L-405mm x2 | S L-2042mm x1 | ŚP x12 | N 3x20 x81 | W6 L-1076mm x1 | A 8x32 x70 | X x10 | ZC x24 |

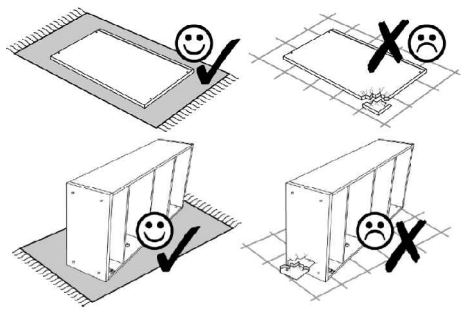

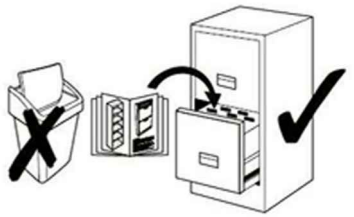

3

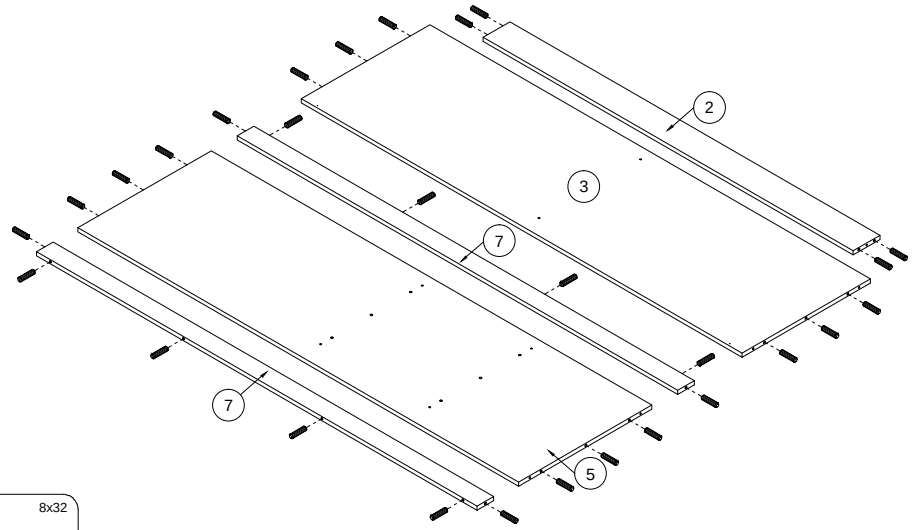


A 8x32 x28

4

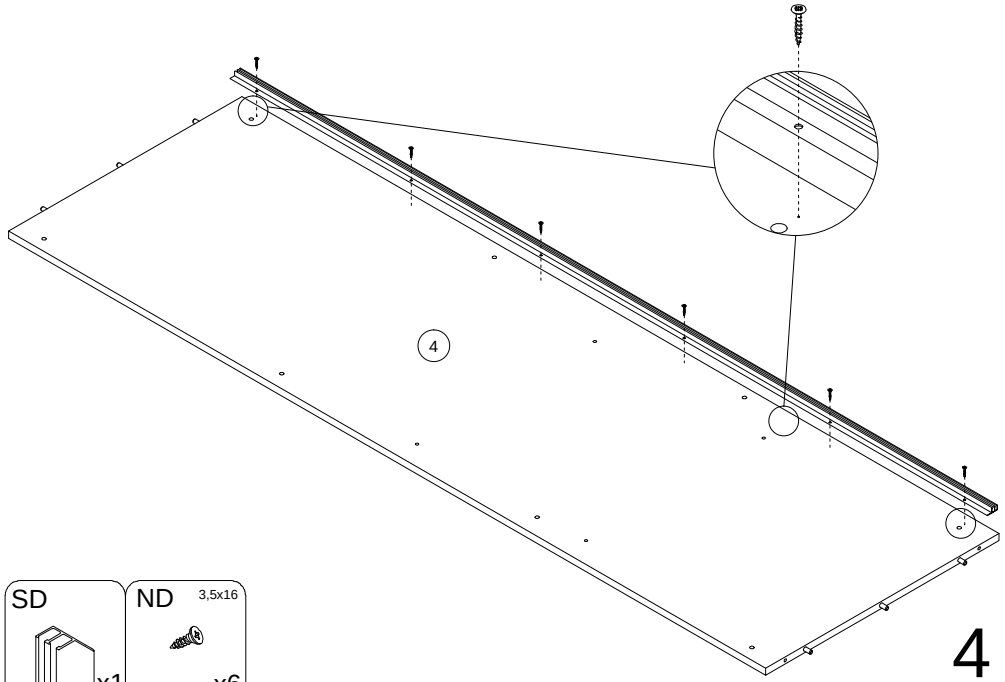


SD x1

ND 3,5x16 x6

5

ZB x4

T x1

ND 3,5x16 x2

I x2

J 4x25 x4

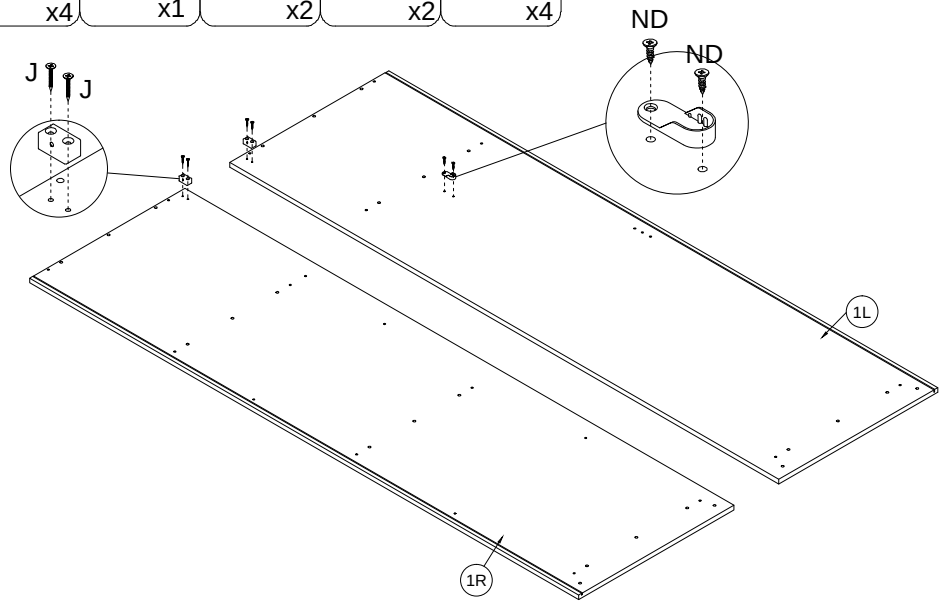


6

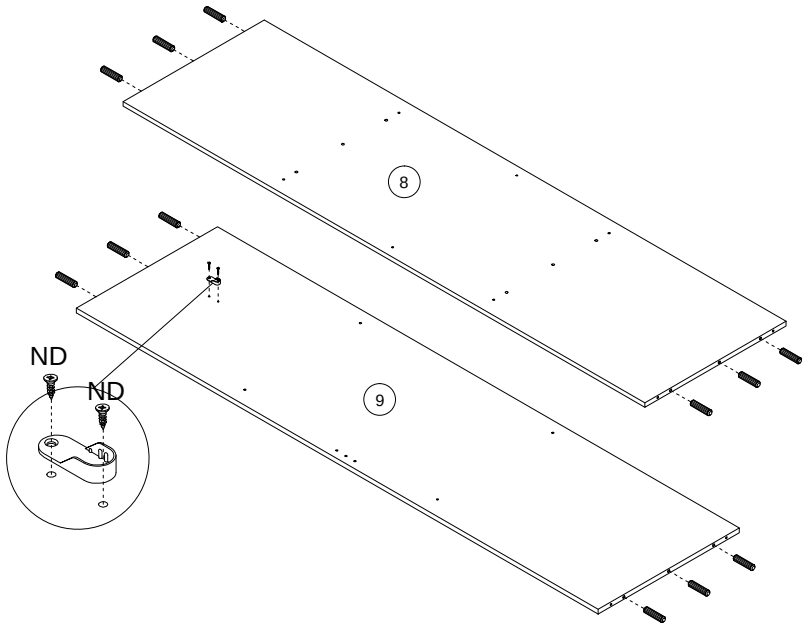


A 8x32 x12

ND 3,5x16 x2

T x1

7

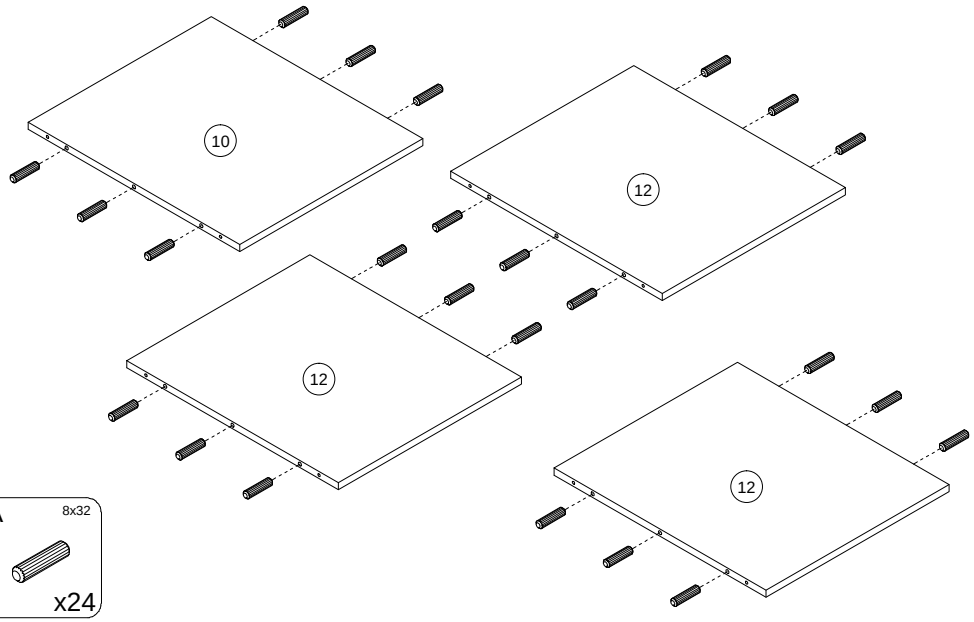


A 8x32 x24

8

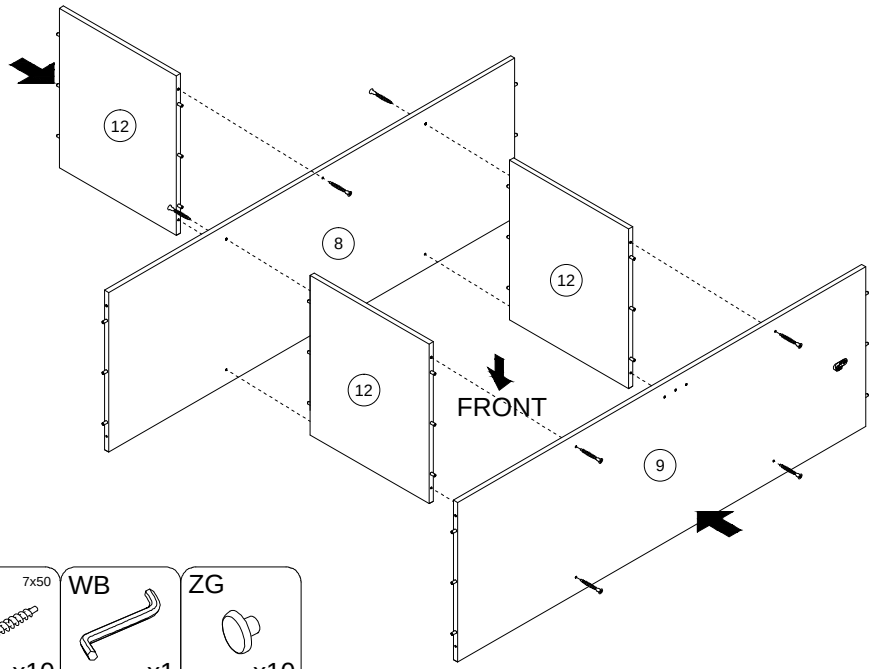


YD 7x50 x10 WB x1 ZG x10

9

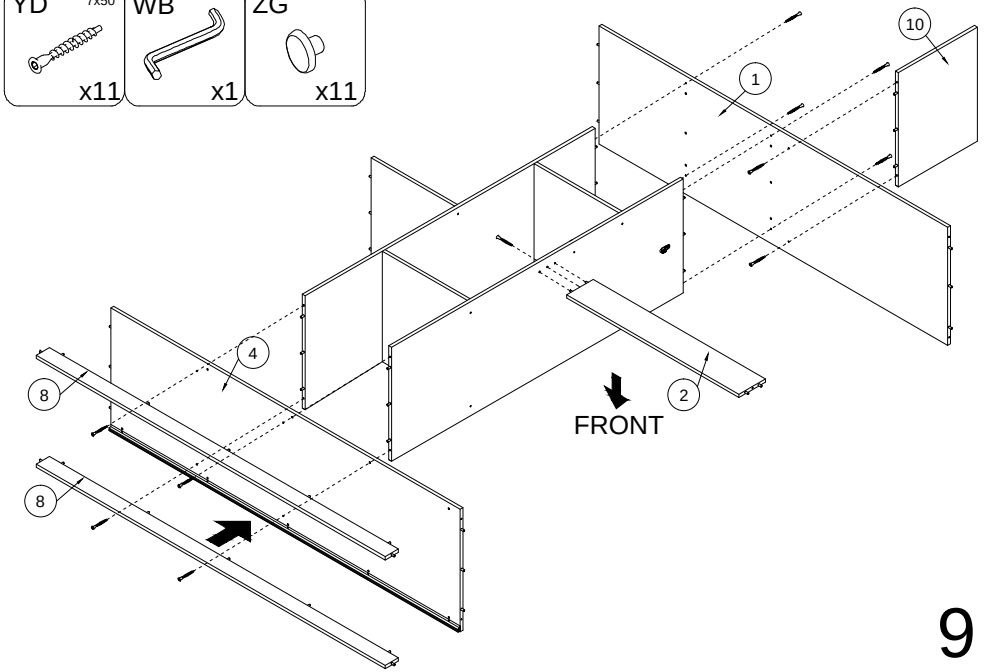


YD 7x50 x11 WB x1 ZG x11

10

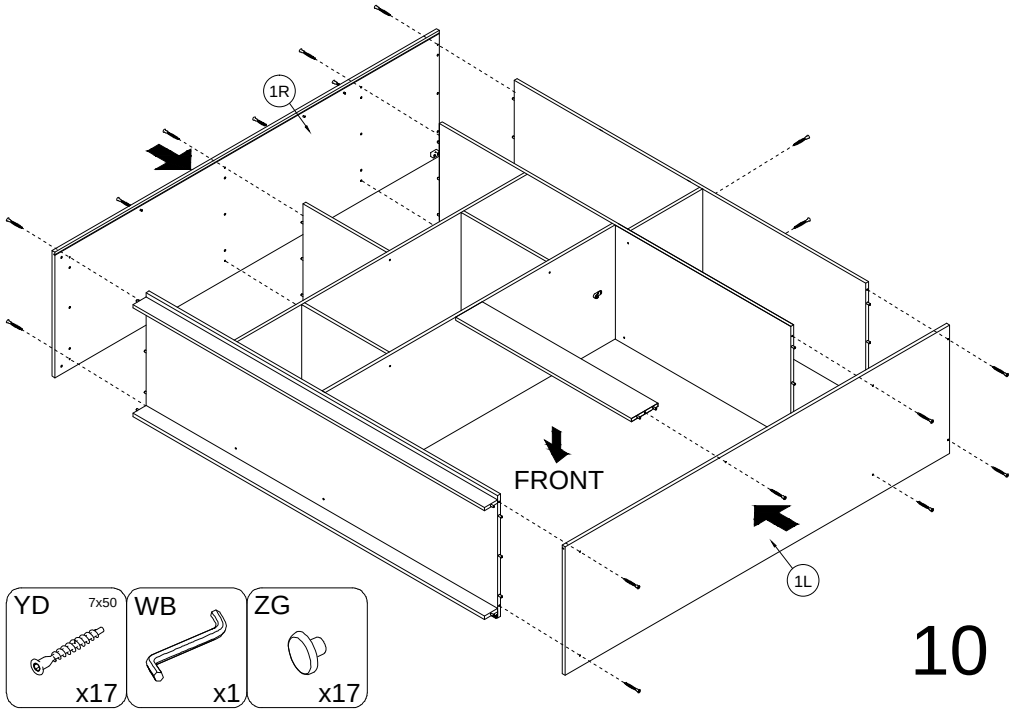


YD 7x50 x17 WB x1 ZG x17

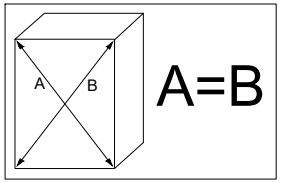


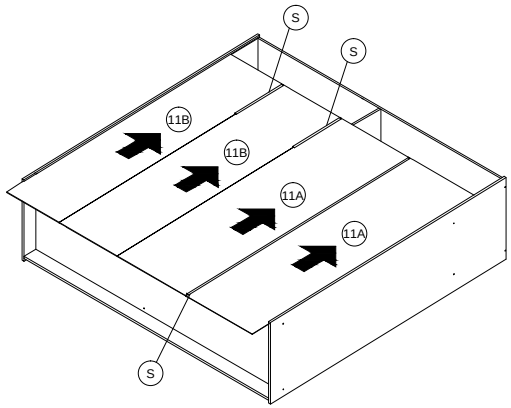


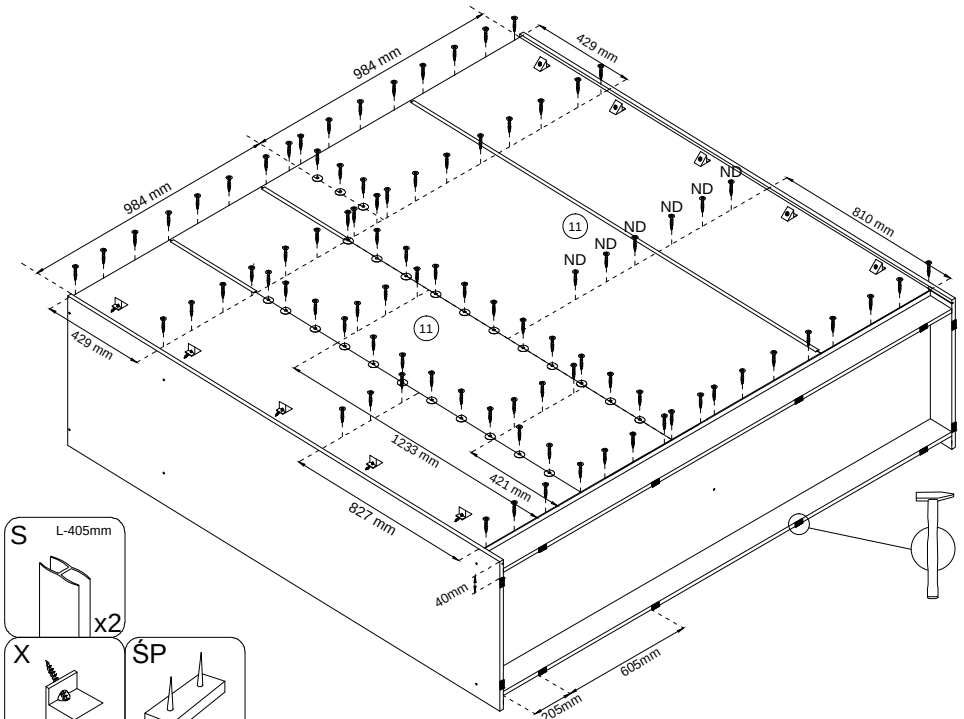


S L-405mm x2

X x10

ŚP x12

ZC x24

S L-1645mm x1

N 3x20 x70

ND 3,5x16 x66

11

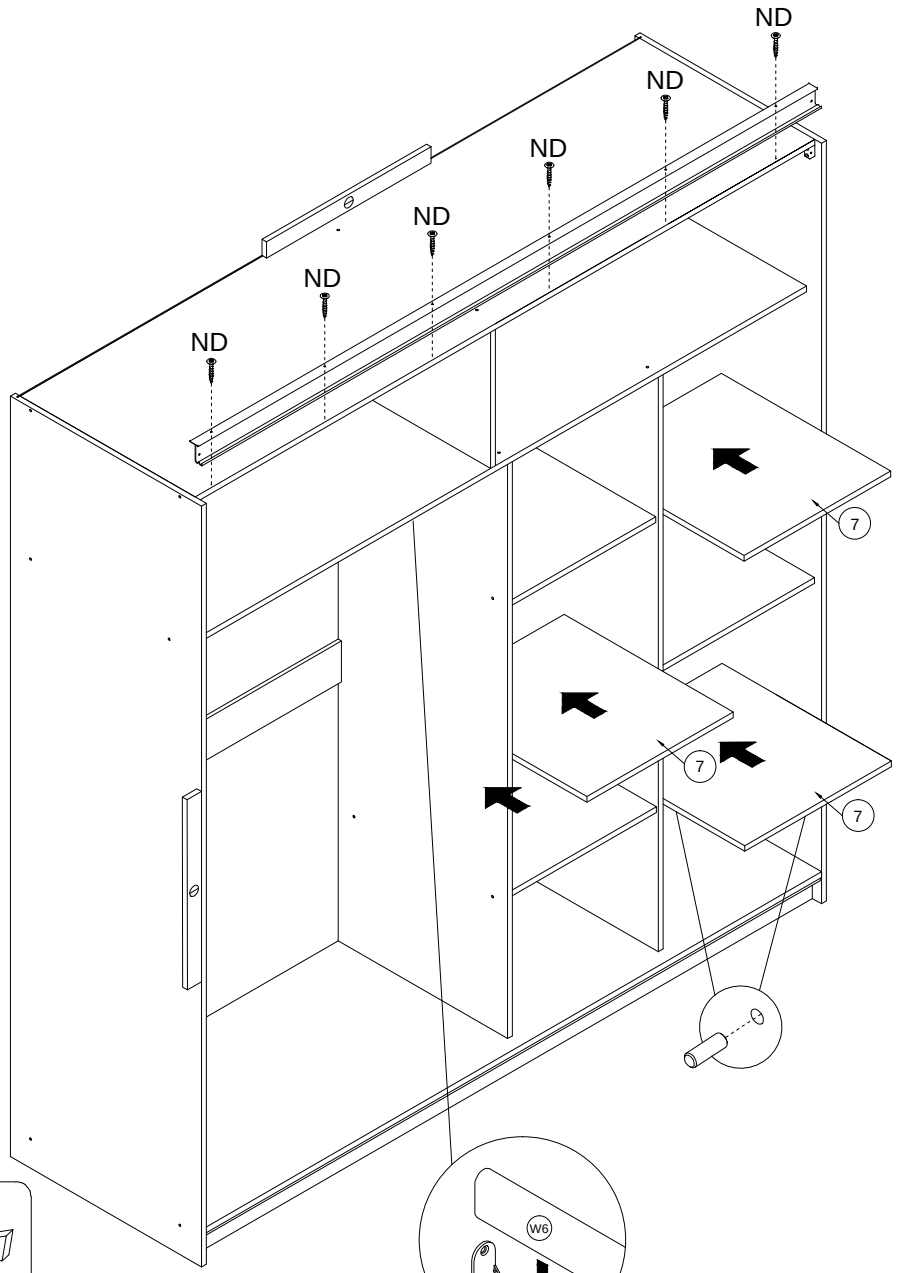


KL x4

SG x1

W6 L-997mm x1

ND 3,5x16 x6

ZB x12

12

# 150

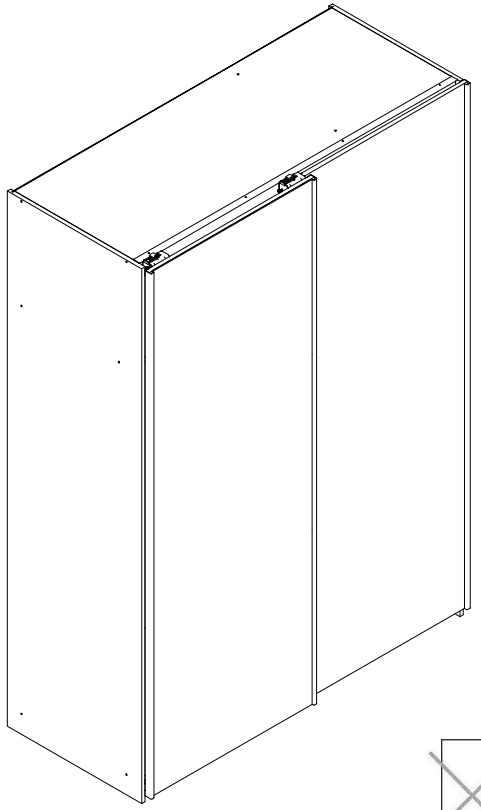

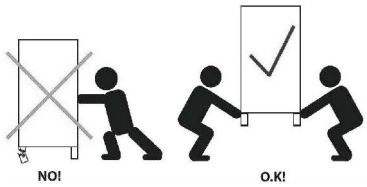


11.02.2016

(D) Montageanleitung
(FR) Notice de montage
(NL) Handleiding voor de montage
(CZ) Montážní návod
(HU) Szerelési útmutató
(TR) Montaj talimati
(GB) Assembly Instructions
(IT) Istruzioni di montaggio
(PL) Instrukcja montażu
(SK) Návod na montáž
(RO) Instructiuni de montaj
(RU) Инструкции по монтажу

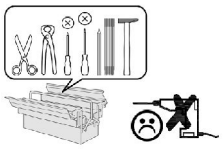

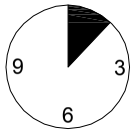


2-2,5

1

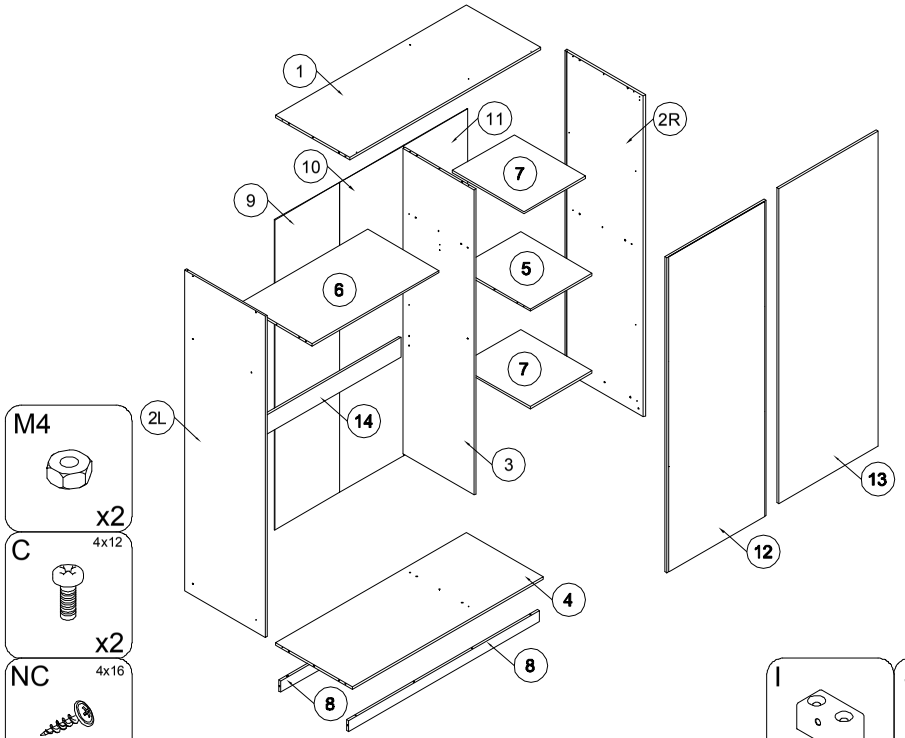


| | | | | | | | |
|---|---|---|---|---|---|---|---|
| M4 x2 | | | | | | I x2 | J 4x25 x4 |
| C 4x12 x2 | | | | | | | |
| NC 4x16 x20 | | | | | | | |
| NG 5x16 x16 | BS x2 | D2 x2 | RK x1 | D x2 | AS x1 | ASG x1 | R x3 |
| ZB x8 | T x2 | ND 3,5x16 x66 | YD 7x50 x20 | WB x1 | ZG x20 | X x8 | ZC x14 |
| A 8x32 x46 | SD x1 | SG x1 | W6 L-997mm x1 | M 3,9x25 x2 | HM x2 | S L-2042mm x1 | N 3x20 x42 |

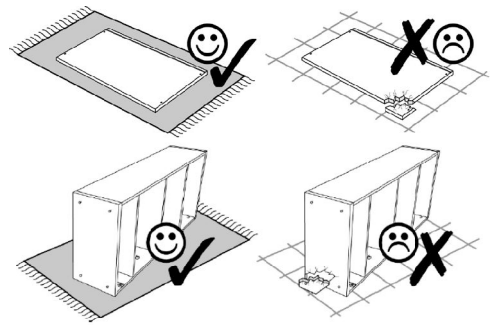

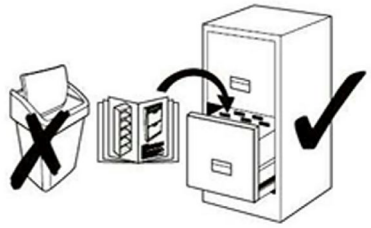

2

3

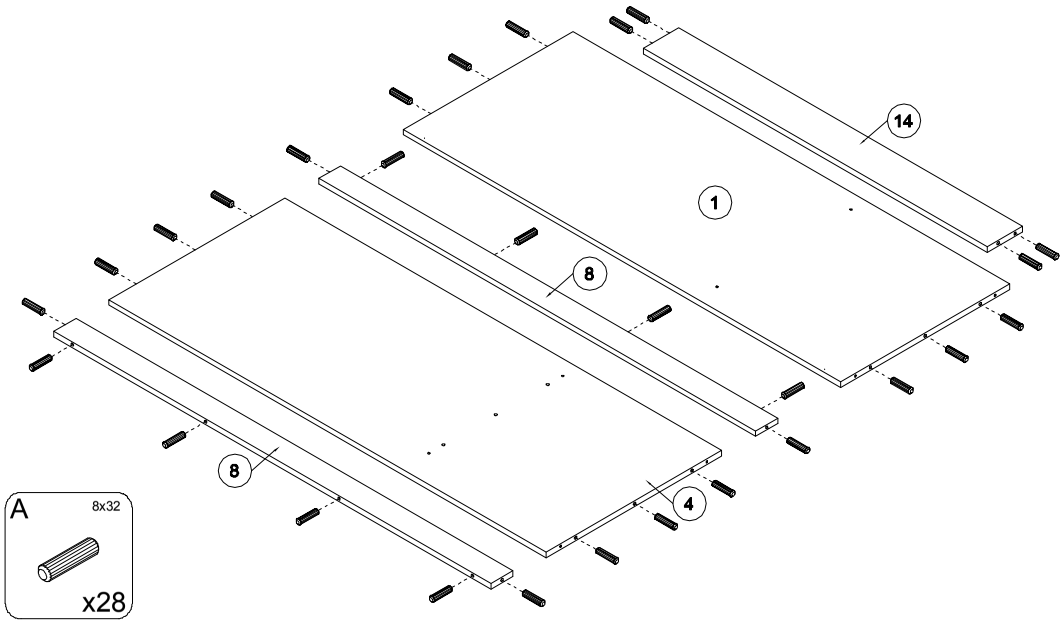
14
1
8
8
4
A 8x32 x28

5

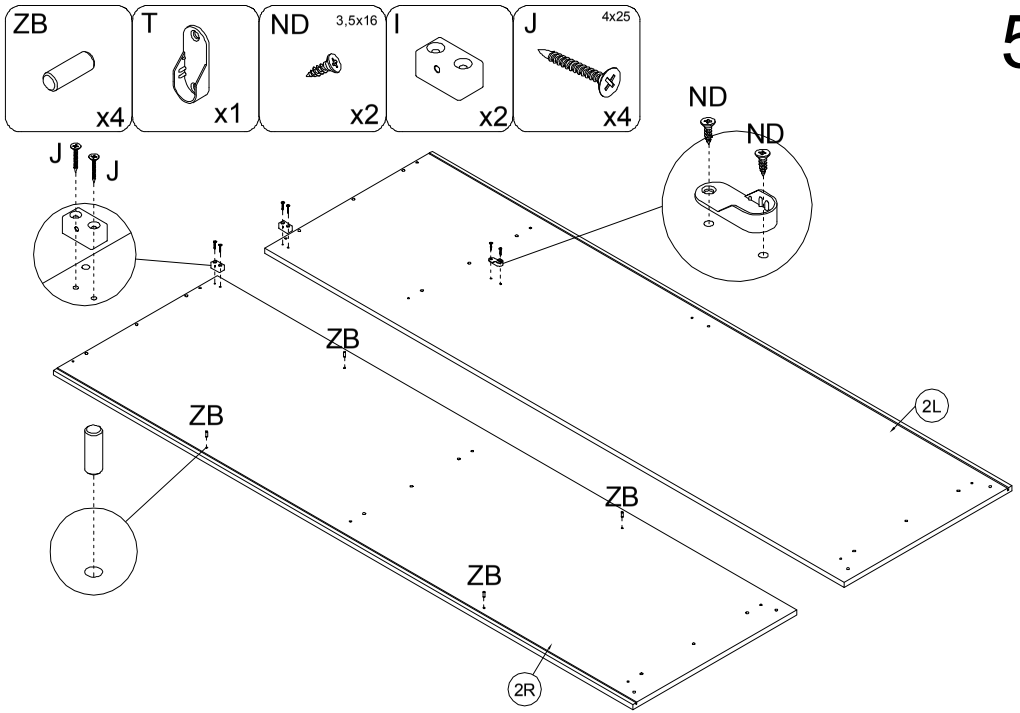
ZB x4
T x1
ND 3,5x16 x2
I x2
J 4x25 x4
ND
ND
J
J
ZB
ZB
ZB
ZB
2L
2R

4

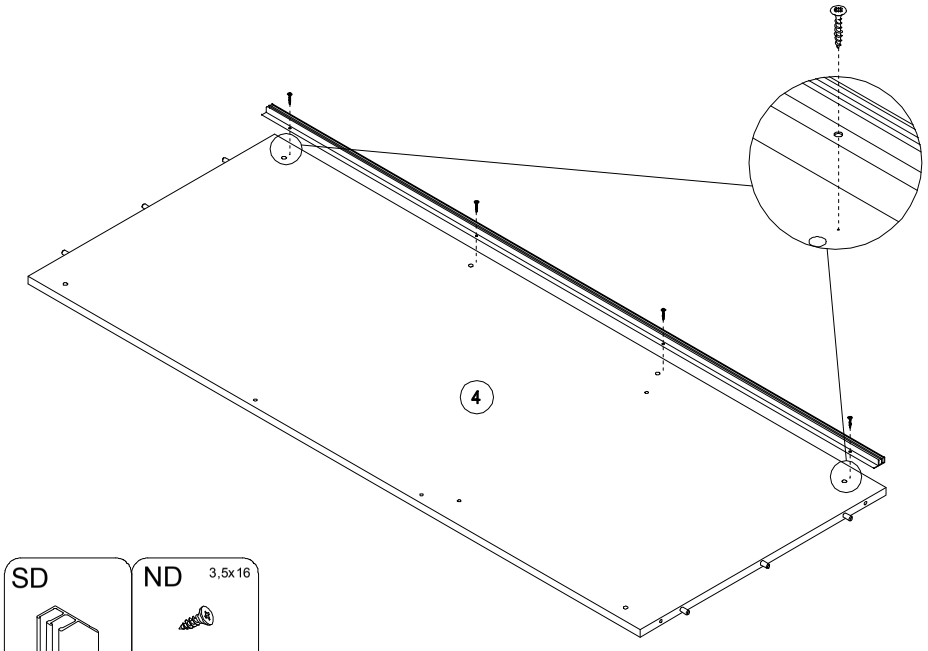
4
SD x1
ND 3,5x16 x4

6

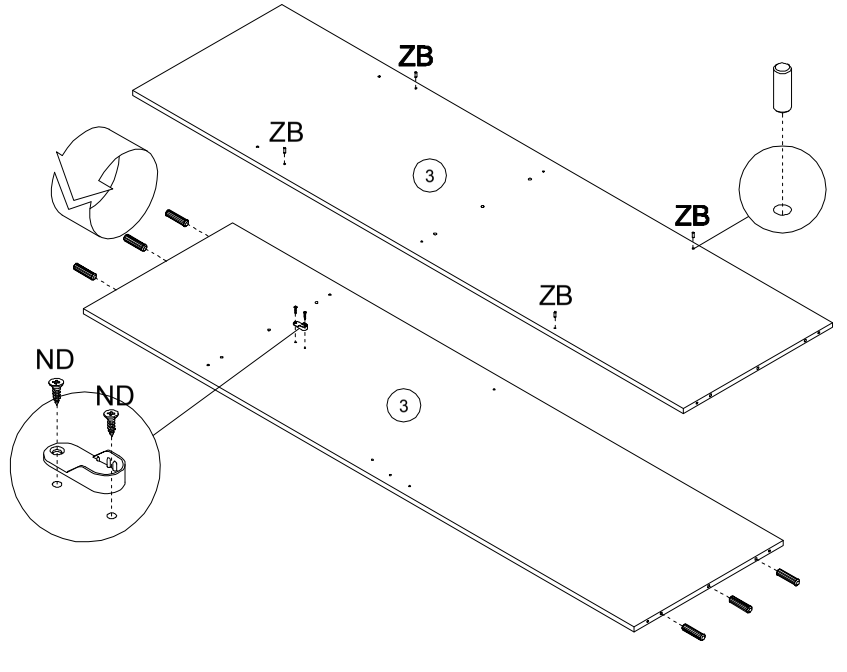
ZB
ZB
3
ZB
ZB
ND
ND
3
A 8x32 x6
ND 3,5x16 x2
T x1
ZB x4

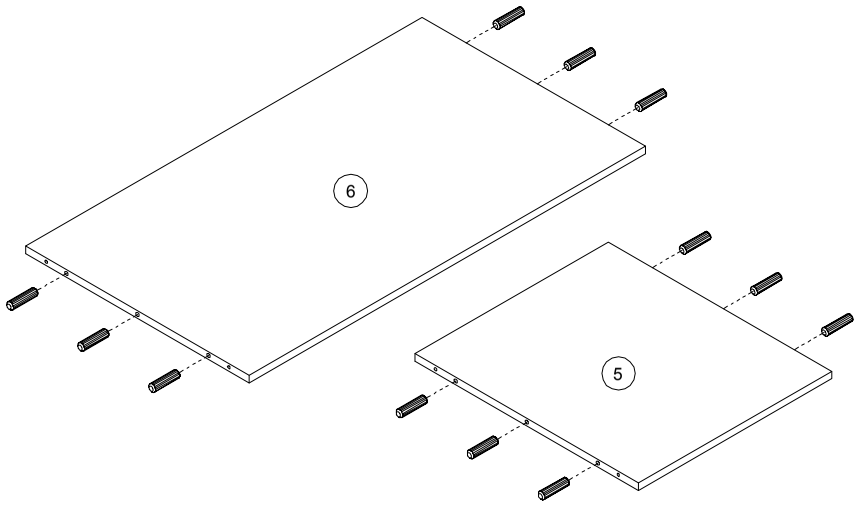


A 8x32 x12

7

YD 7x50 x4 WB x1 ZG x4

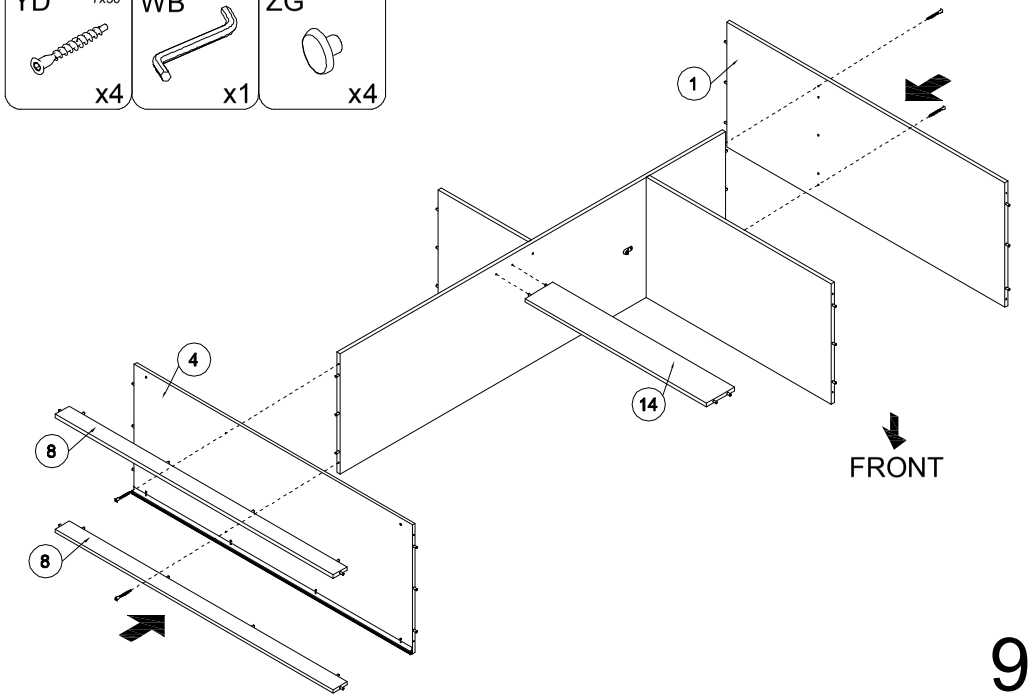


9

YD 7x50 x4 WB x1 ZG x4

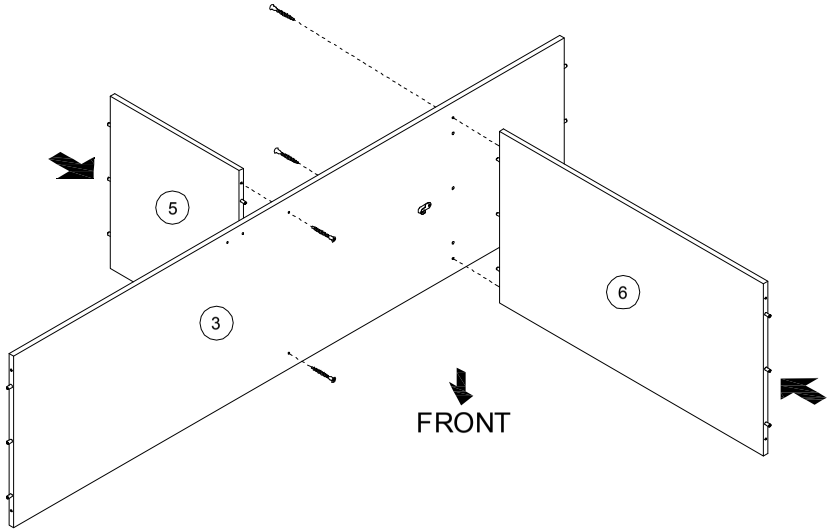


8

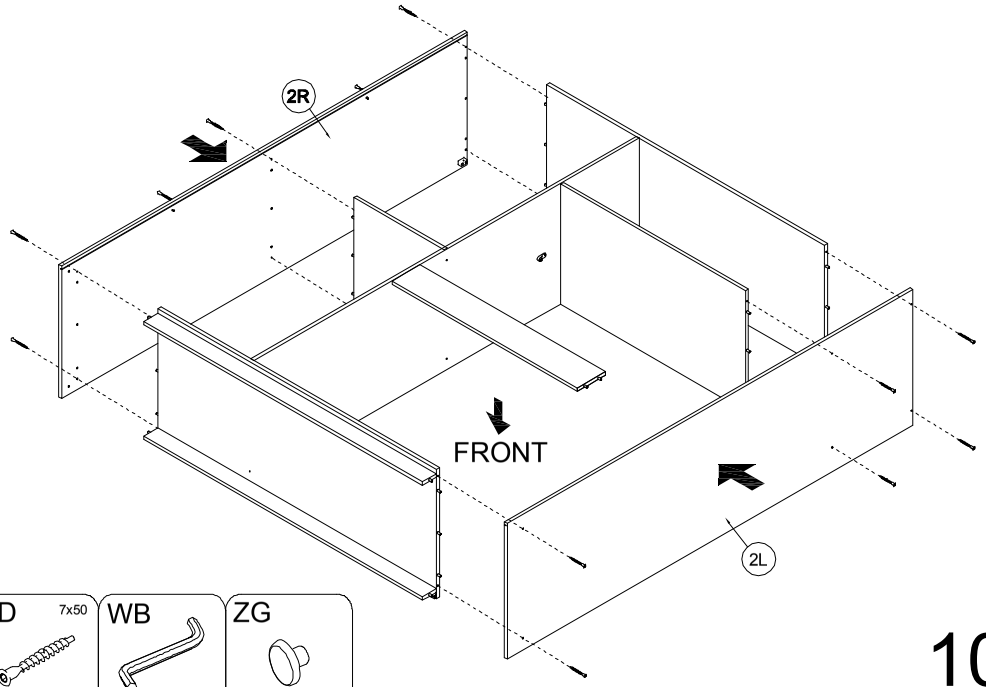


YD 7x50 x12 WB x1 ZG x12

10

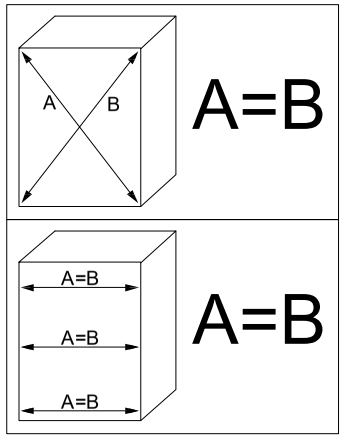
A
B
A=B
A=B
A=B
A=B

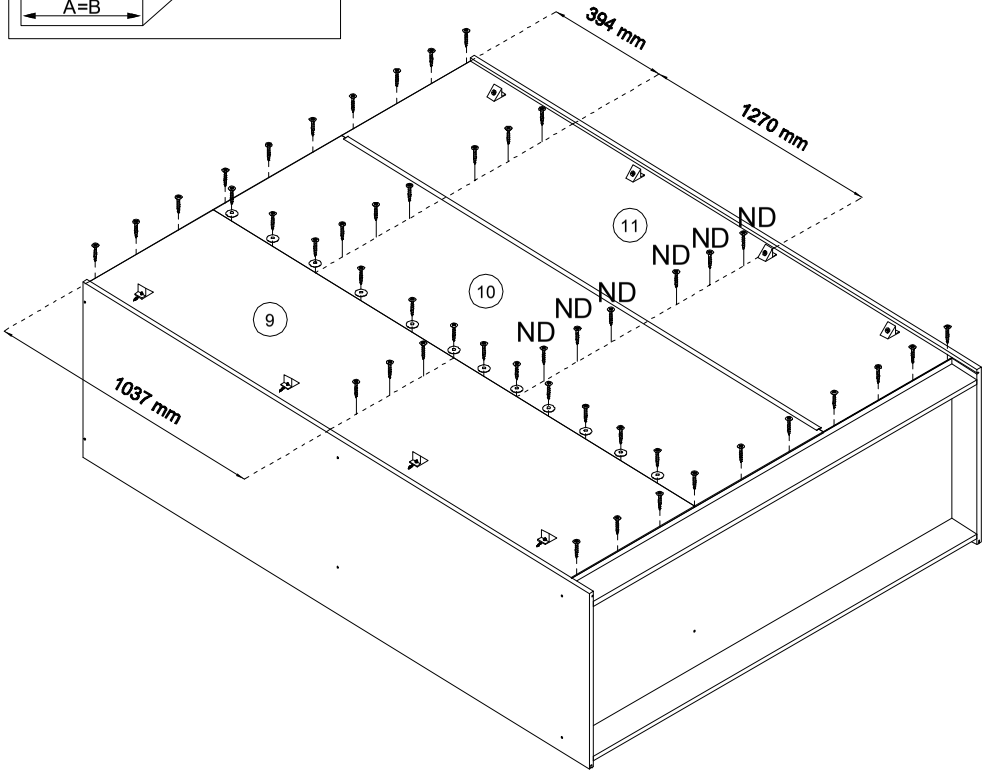
394 mm
1270 mm
1037 mm
9
10
11
ND

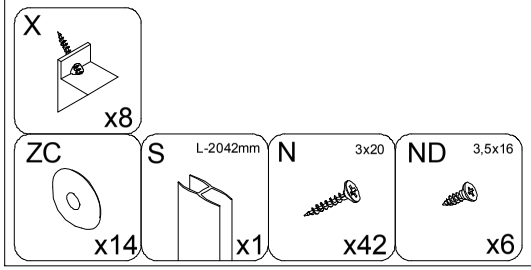
X
x8
ZC
x14
S
L-2042mm
x1
N
3x20
x42
ND
3,5x16
x6

11

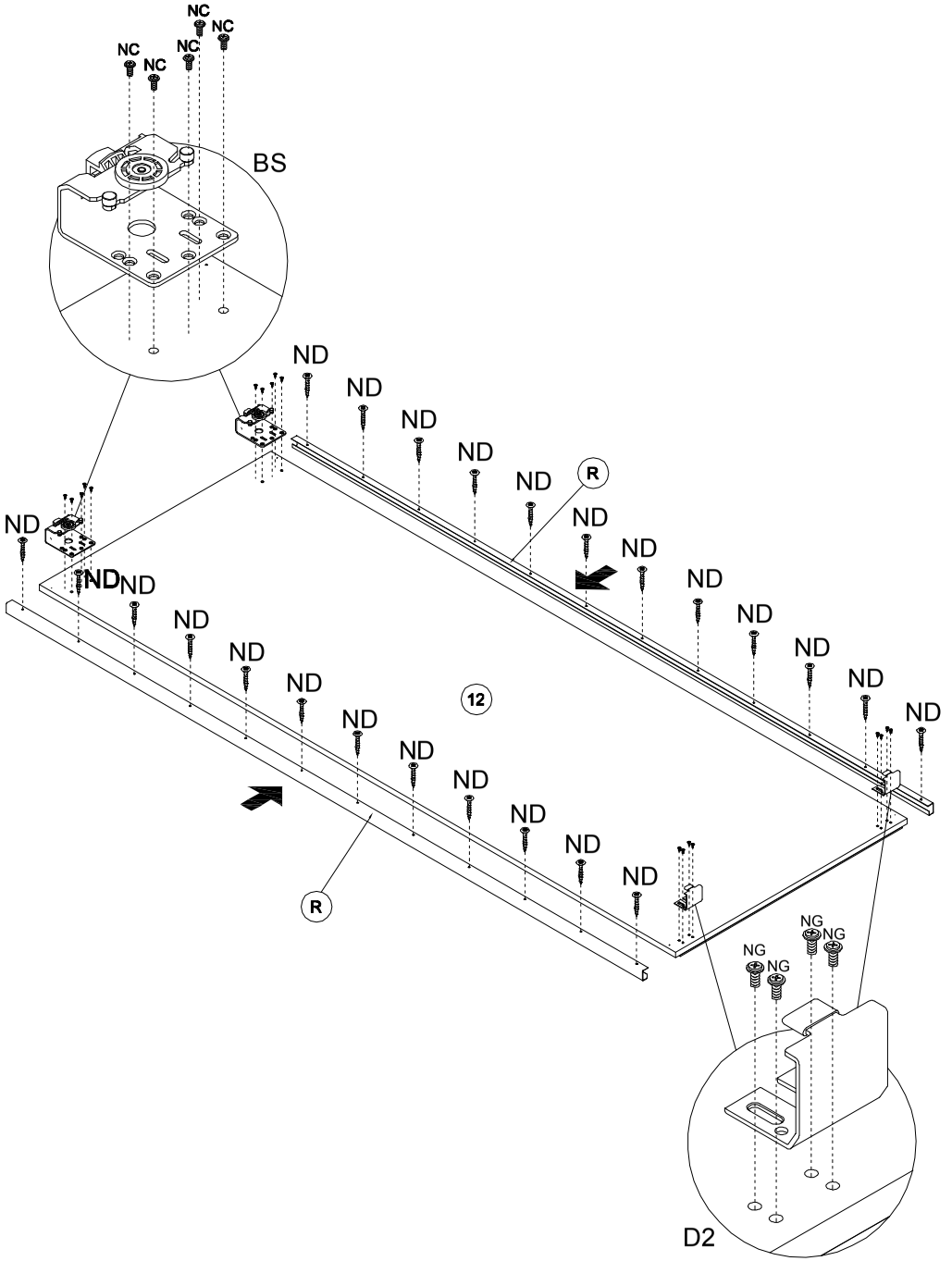
NC
BS
ND
R
12
NG
D2

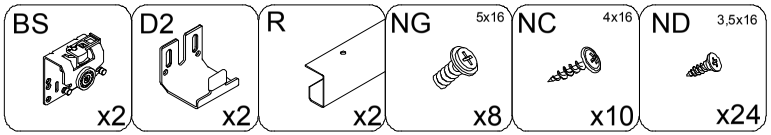
BS
x2
D2
x2
R
x2
NG
5x16
x8
NC
4x16
x10
ND
3,5x16
x24

12

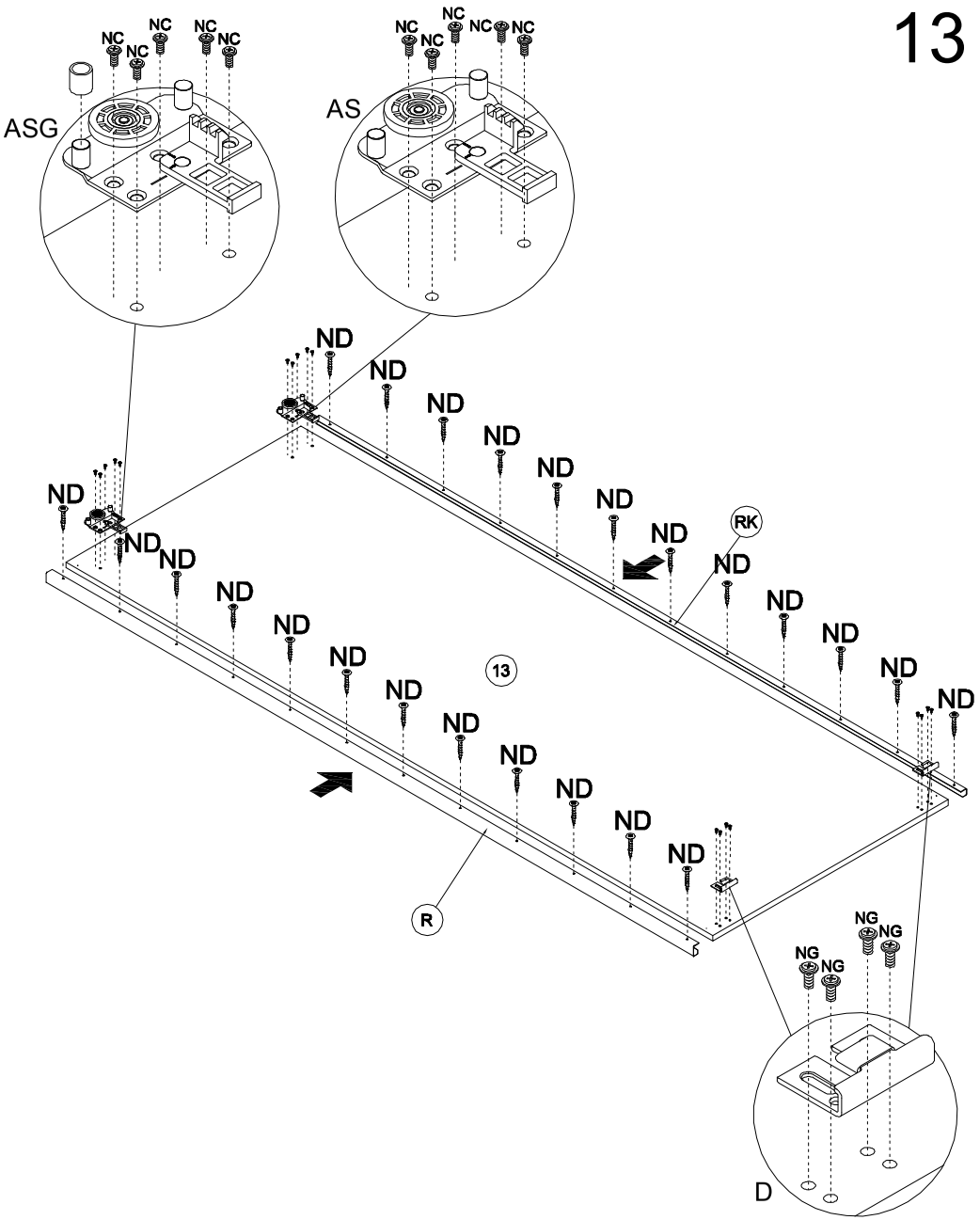


| D | AS | ASG | R | RK | NG 5x16 | NC 4x16 | ND 3,5x16 |
|---|---|---|---|---|---|---|---|
| x2 | x1 | x1 | x1 | x1 | x8 | x10 | x24 |

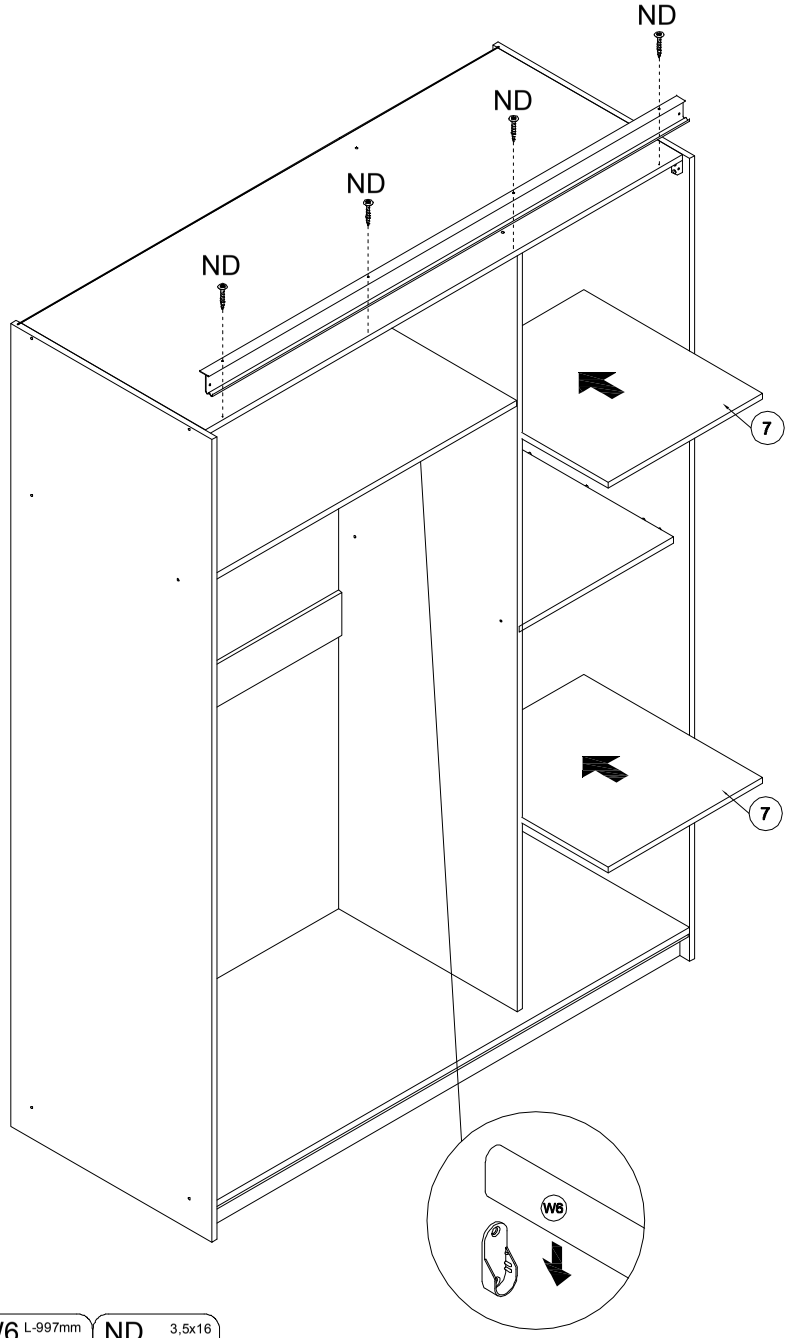


| SG | W6 L-997mm | ND 3,5x16 |
|---|---|---|
| x1 | x1 | x4 |

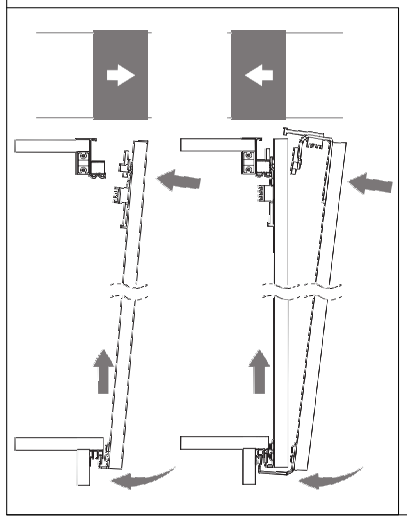

| M4 | C 4x12 | M 3,9x25 | HM |
|---|---|---|---|
| x2 | x2 | x2 | x2 |

200

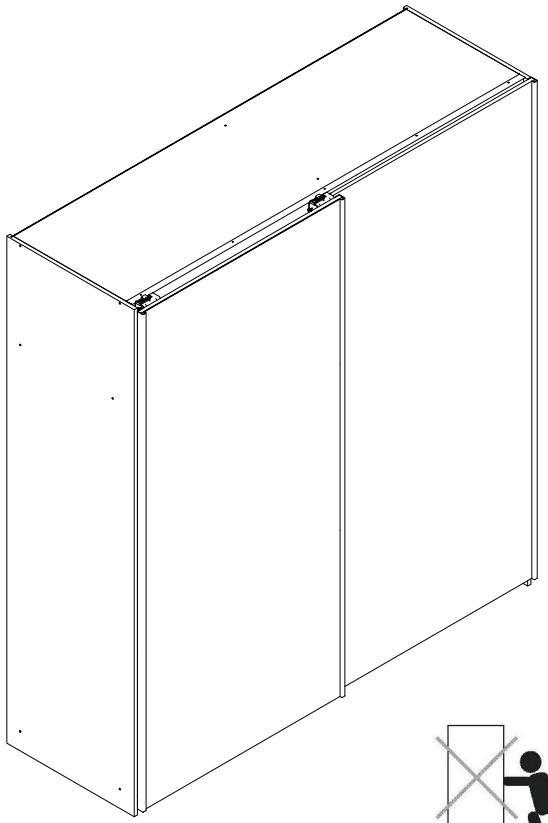

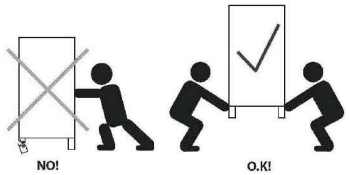


(D) Montageanleitung
(FR) Notice de montage
(NL) Handleiding voor de montage
(CZ) Montážní návod
(HU) Szerelési útmutató
(TR) Montaj talimati
(GB) Assembly Instructions
(IT) Istruzioni di montaggio
(PL) Instrukcja montażu
(SK) Návod na montáž
(RO) Instructiuni de montaj
(RU) Инструкции по монтажу

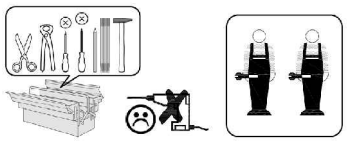



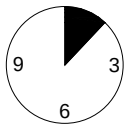


2-2,5

1

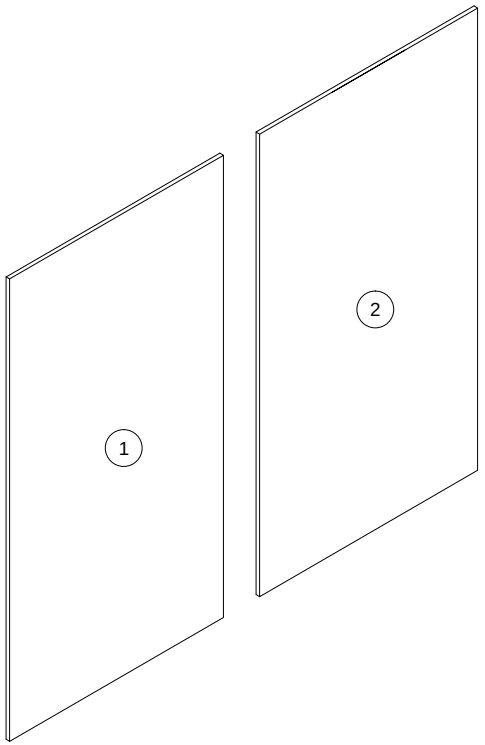


| | | | | | | |
|---|---|---|---|---|---|---|
| D x2 | AS x1 | M4 x2 | C 4x12 x2 | M 3,9x25 x2 | HM x2 | |
| BS x2 | D2 x2 | R x3 | NG 5x16 x16 | NC 4x16 x20 | ND 3,5x16 x48 | RK x1 | ASG x1 |

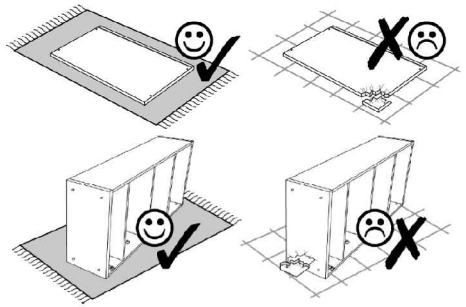

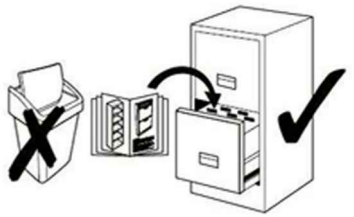

2

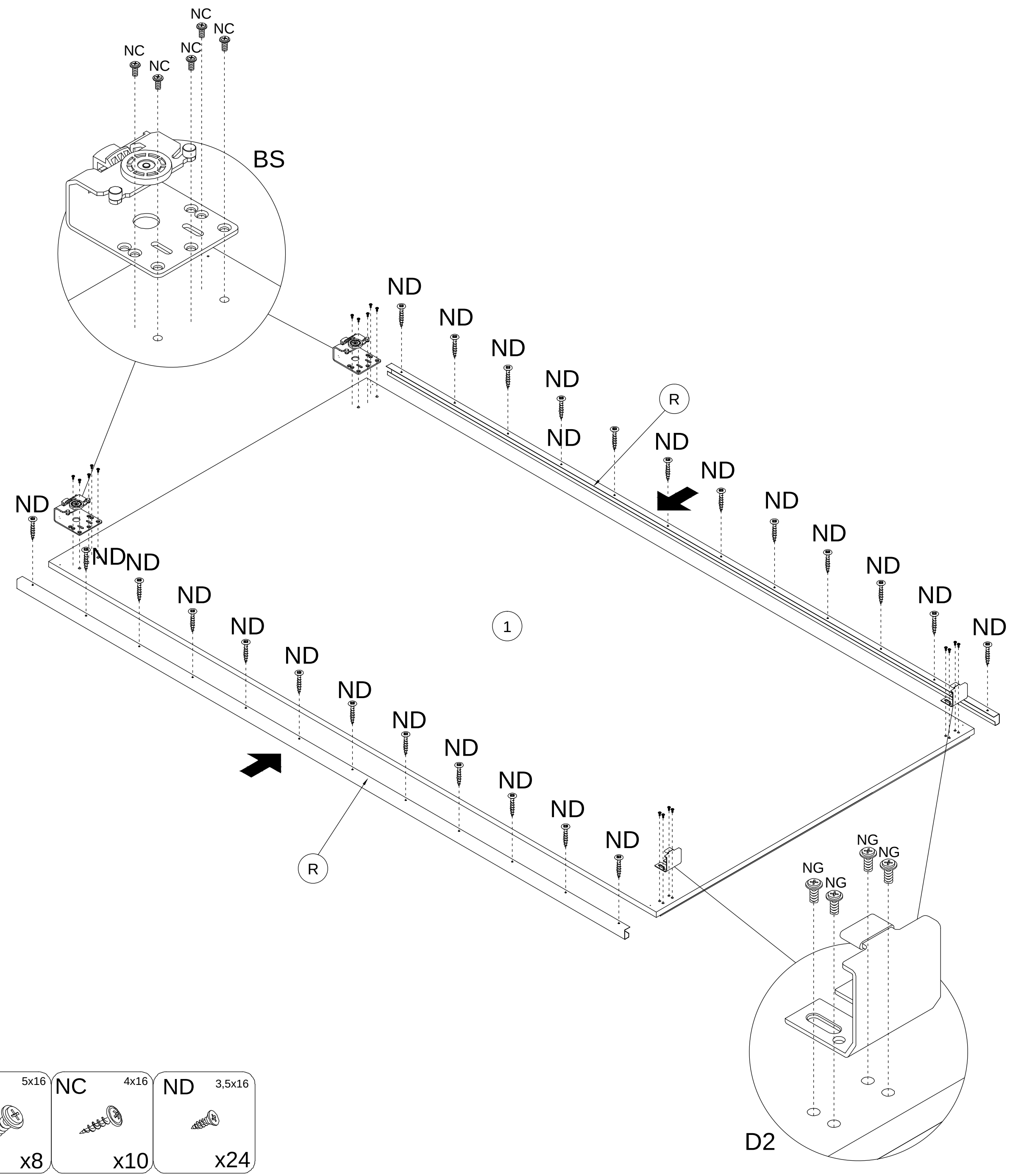


| BS | D2 | R | NG 5x16 | NC 4x16 | ND 3,5x16 |
|---|---|---|---|---|---|
| x2 | x2 | x2 | x8 | x10 | x24 |

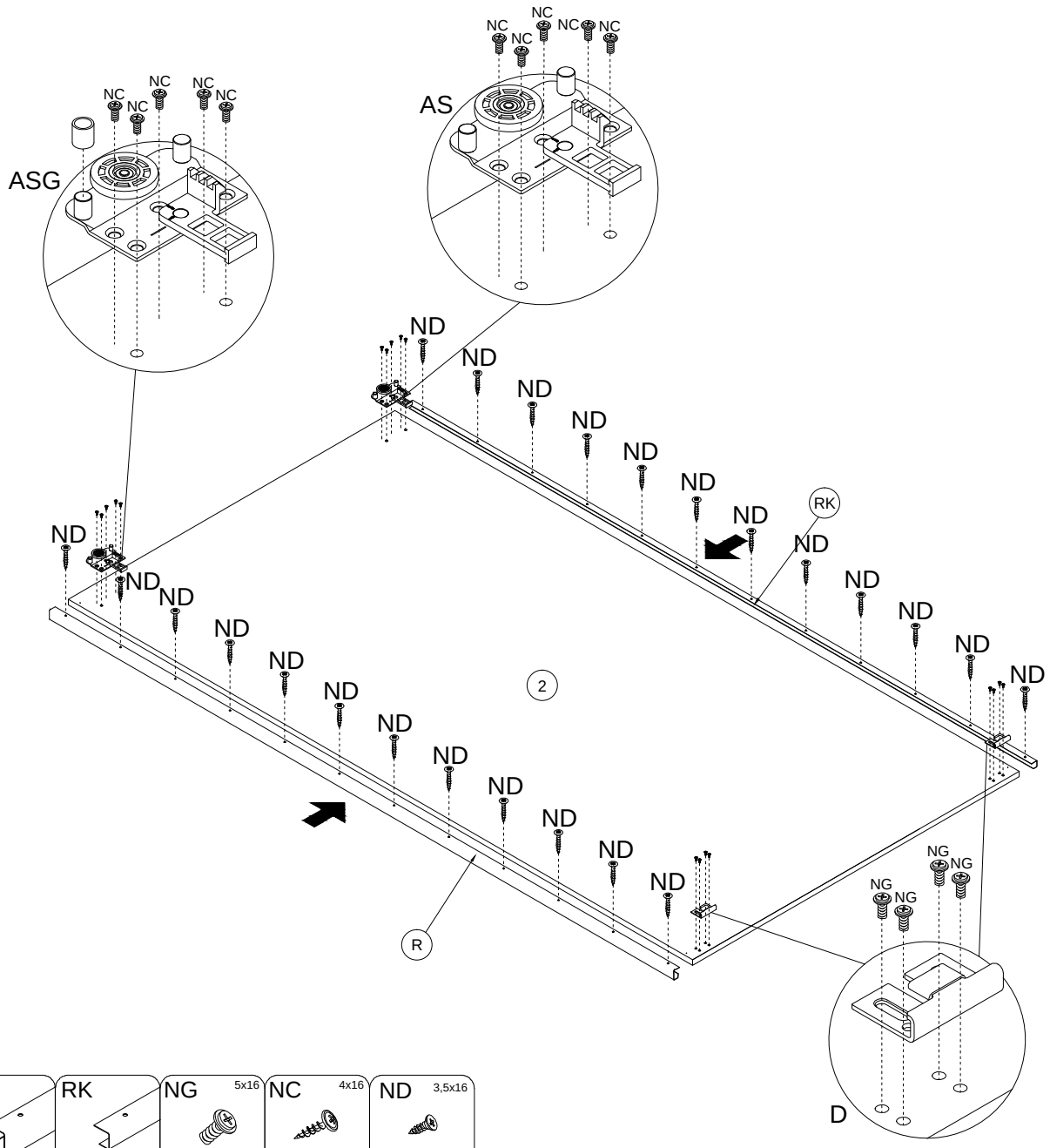


| D | AS | ASG | R | RK | NG 5x16 | NC 4x16 | ND 3,5x16 |
|---|---|---|---|---|---|---|---|
| x2 | x1 | x1 | x1 | x1 | x8 | x10 | x24 |

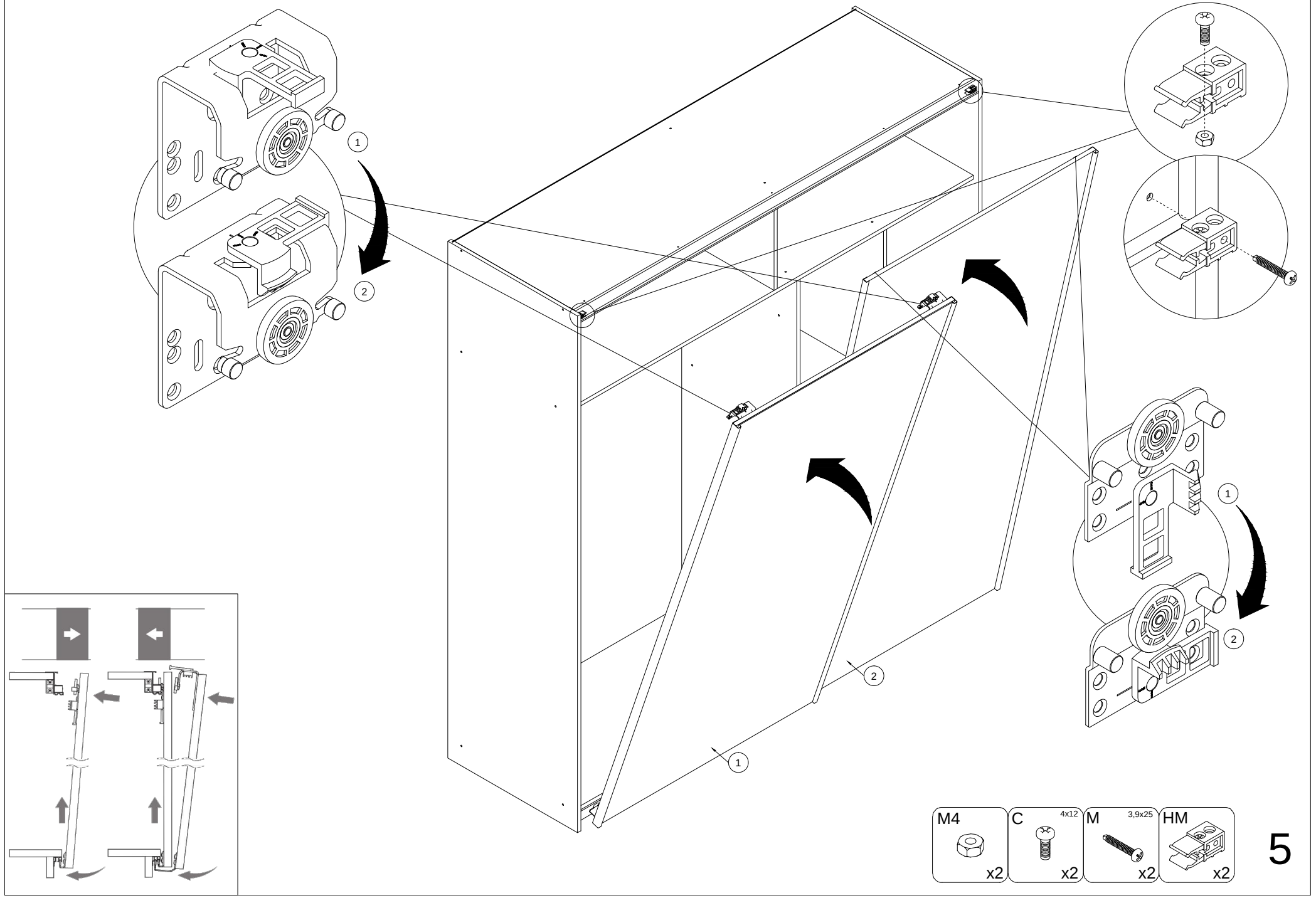
1
2
2
1
1
2
M4
x2
C
4x12
x2
M
3,9x25
x2
HM
x2

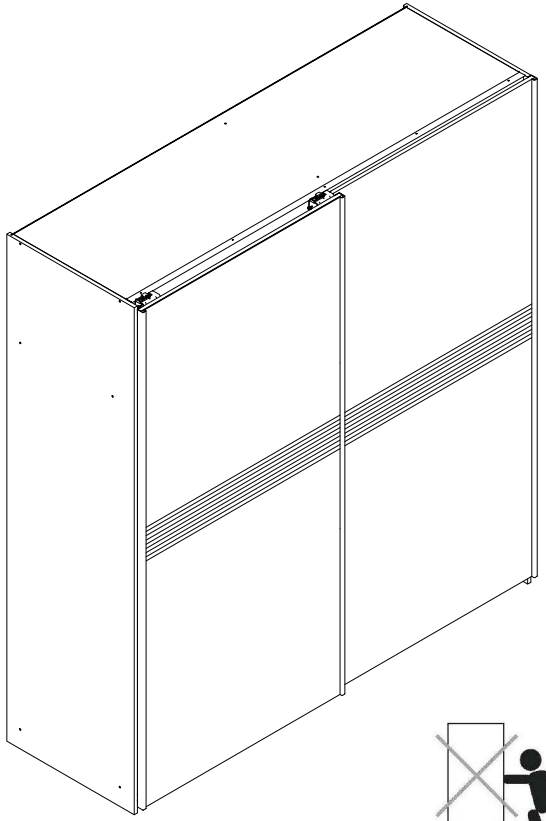

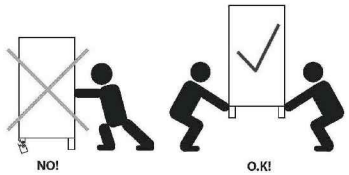


(D) Montageanleitung
(FR) Notice de montage
(NL) Handleiding voor de montage
(CZ) Montážní návod
(HU) Szerelési útmutató
(TR) Montaj talimati
(GB) Assembly Instructions
(IT) Istruzioni di montaggio
(PL) Instrukcja montażu
(SK) Návod na montáž
(RO) Instructiuni de montaj
(RU) Инструкции по монтажу

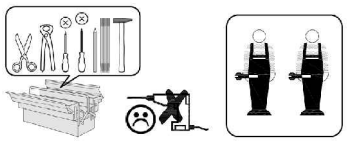



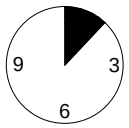


2-2,5

1

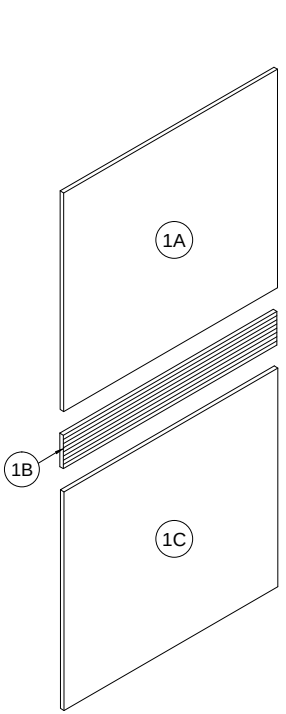


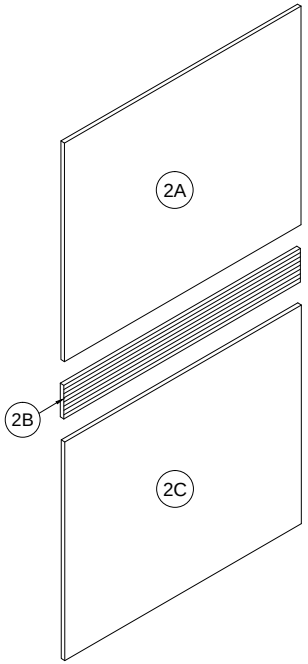


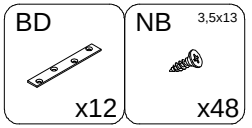





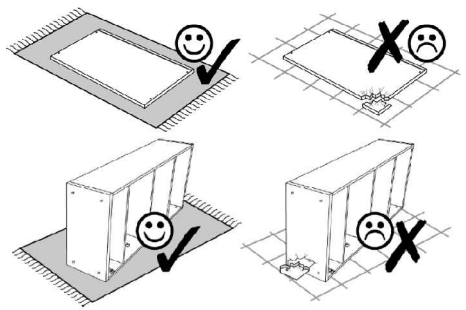

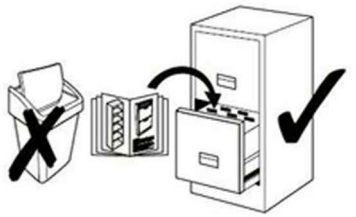

2

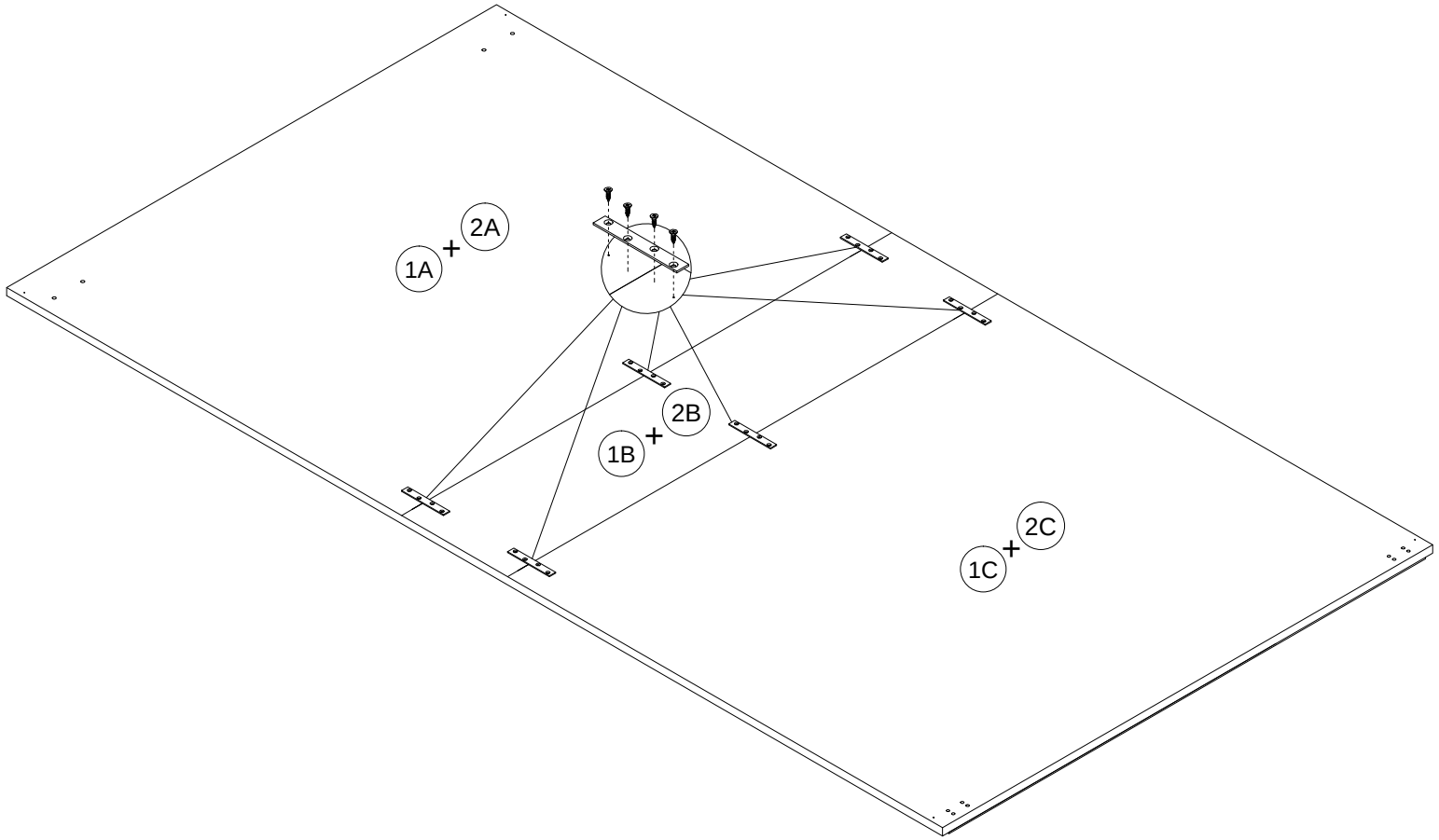


| BD | NB 3,5x13 |
| --- | --- |
| x12 | x48 |

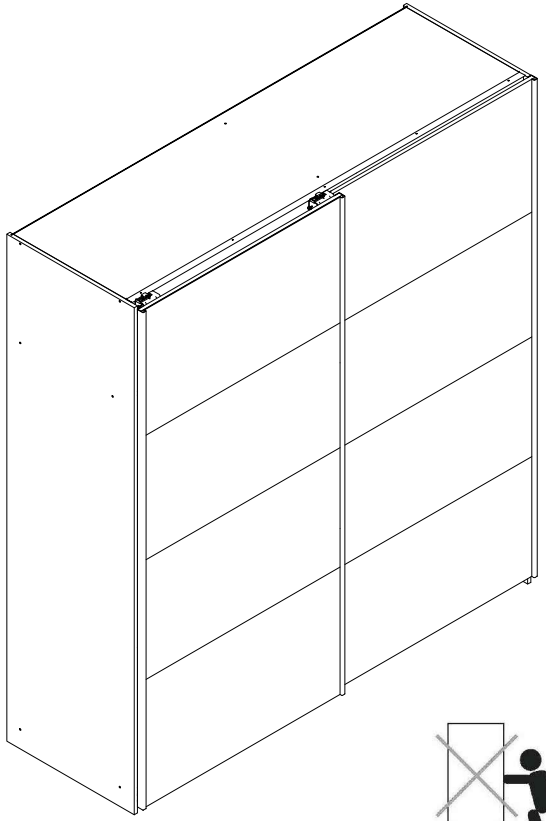

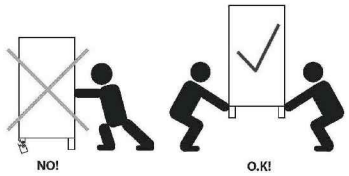


(D) Montageanleitung
(FR) Notice de montage
(NL) Handleiding voor de montage
(CZ) Montážní návod
(HU) Szerelési útmutató
(TR) Montaj talimati
(GB) Assembly Instructions
(IT) Istruzioni di montaggio
(PL) Instrukcja montażu
(SK) Návod na montáž
(RO) Instructiuni de montaj
(RU) Инструкции по монтажу

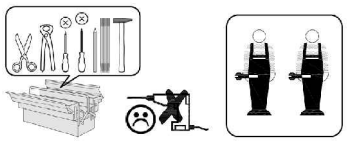



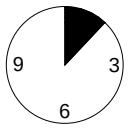


2-2,5

1

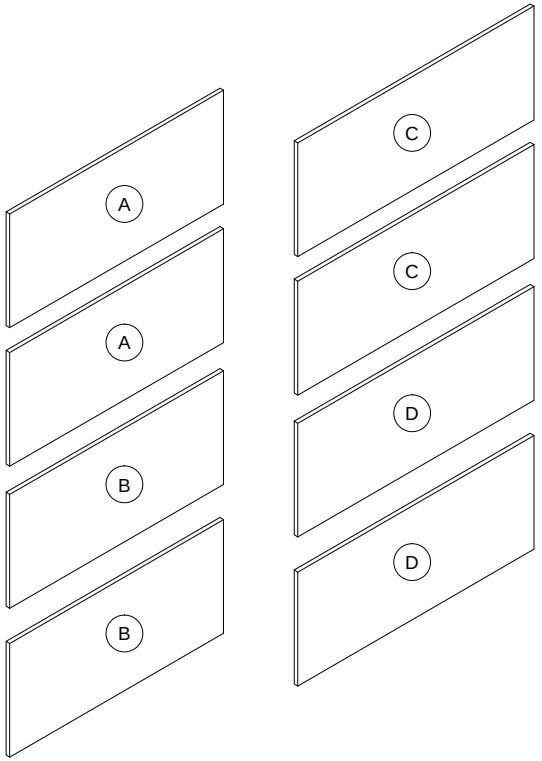


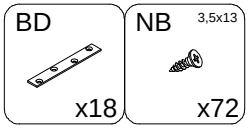





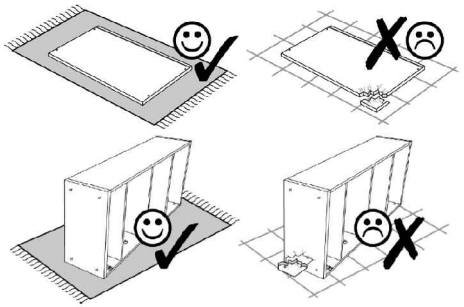

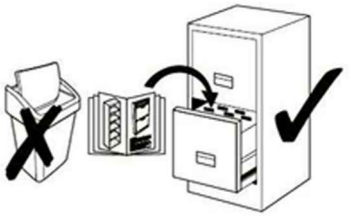

2

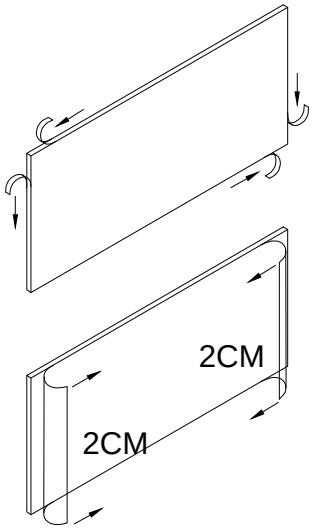


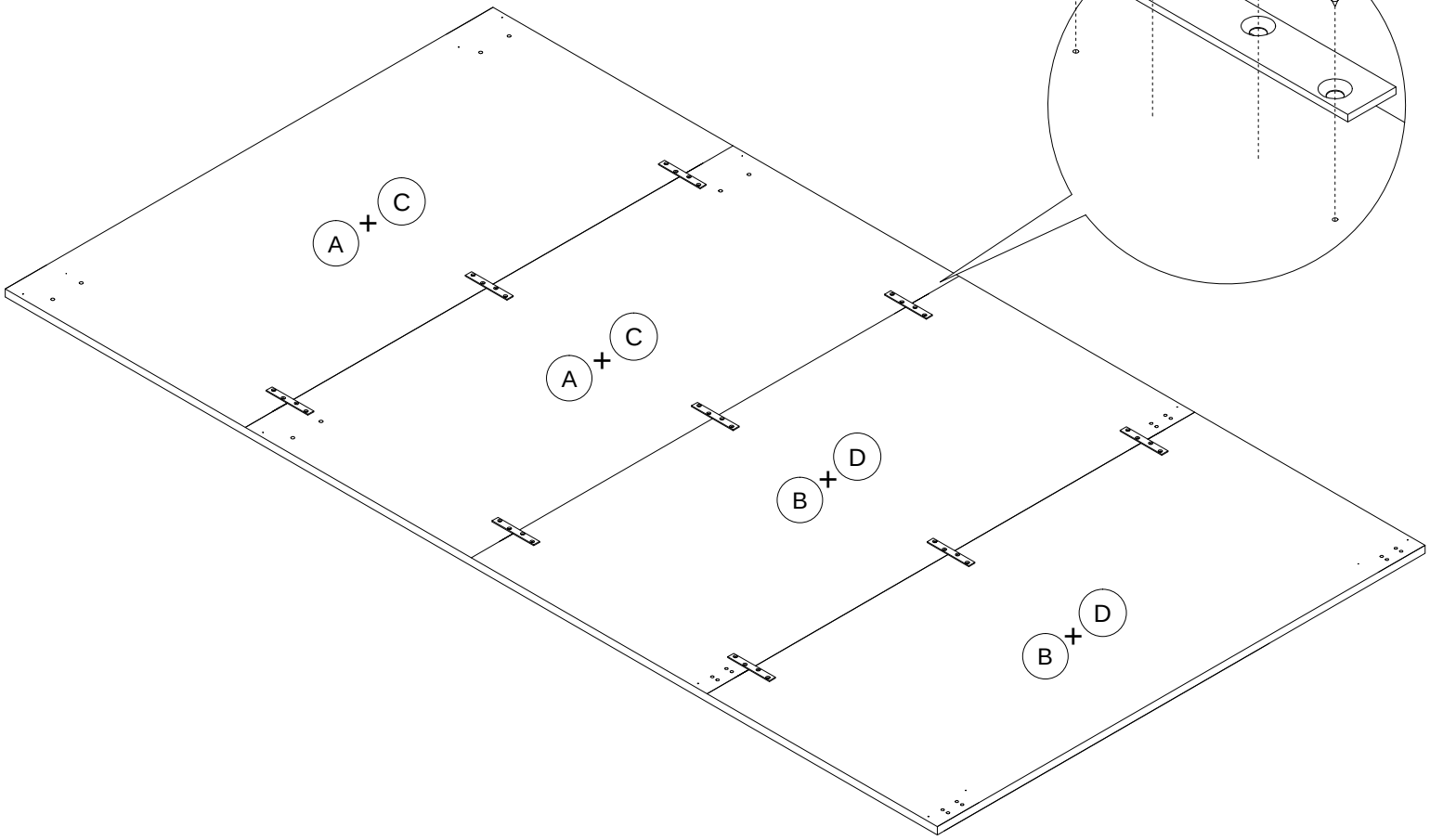


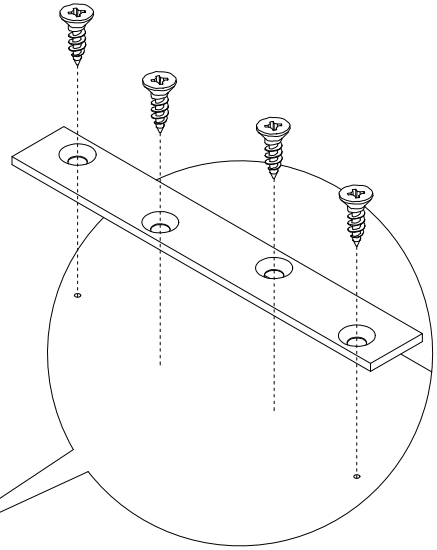

| BD | NB 3,5x13 |
| --- | --- |
| x18 | x72 |